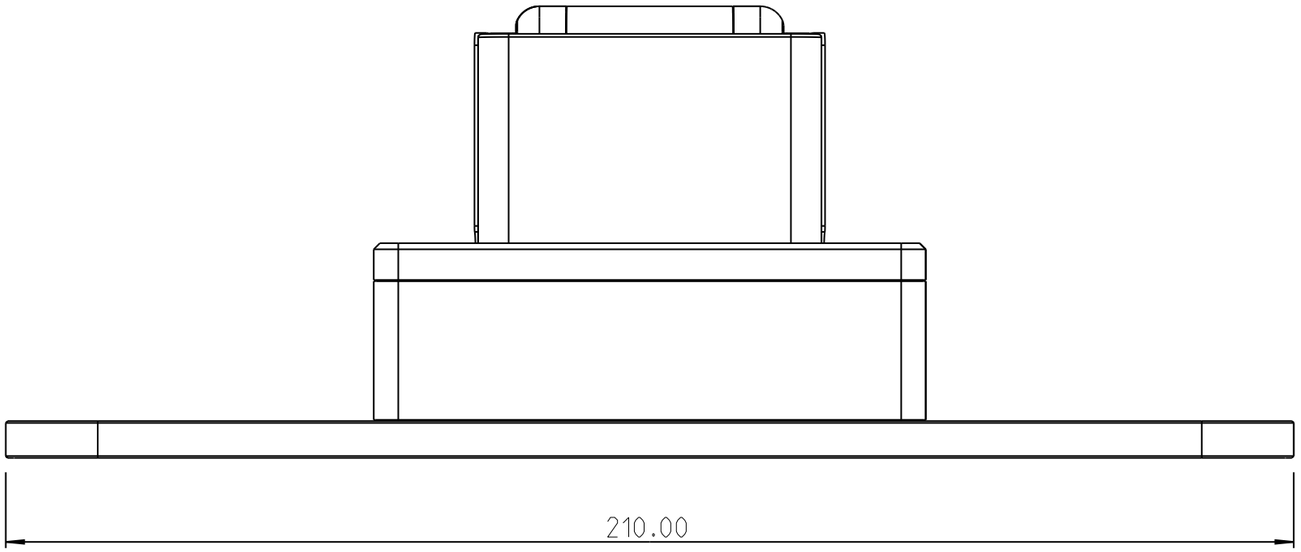
210.00

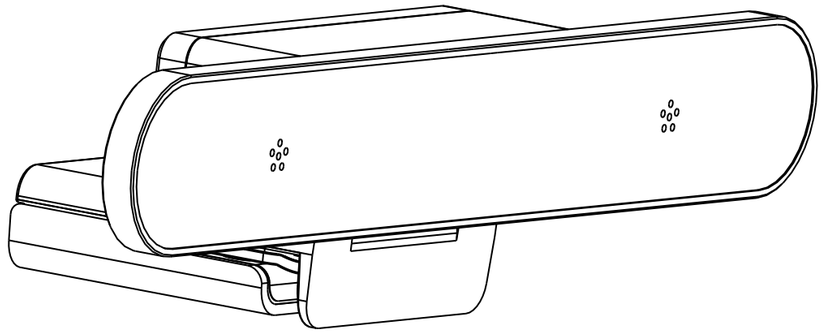

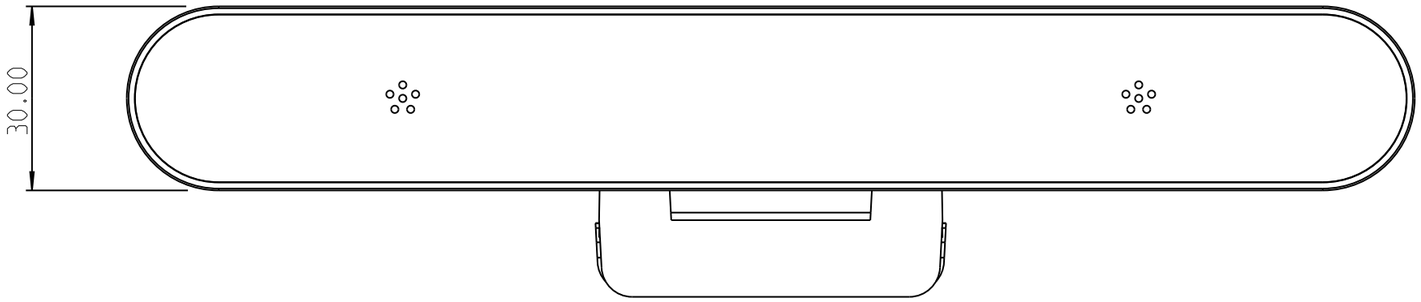
30.00

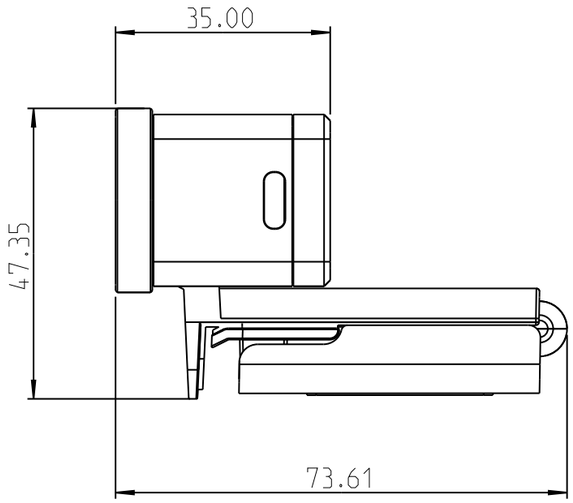
35.00
47.35
73.61