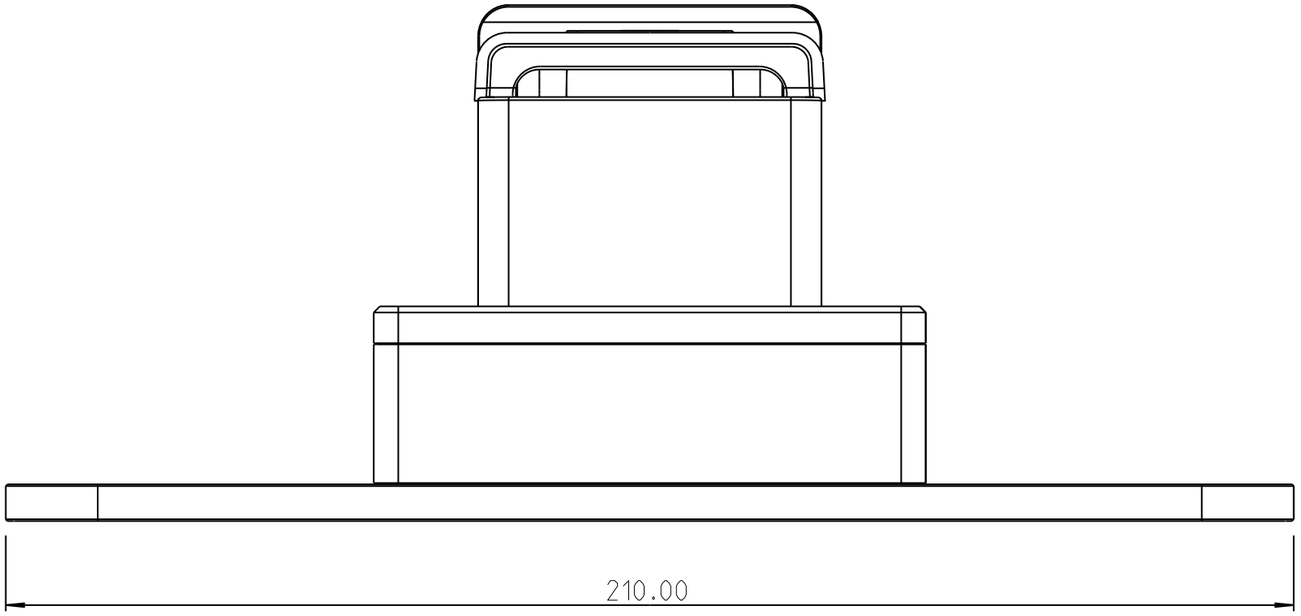
210.00

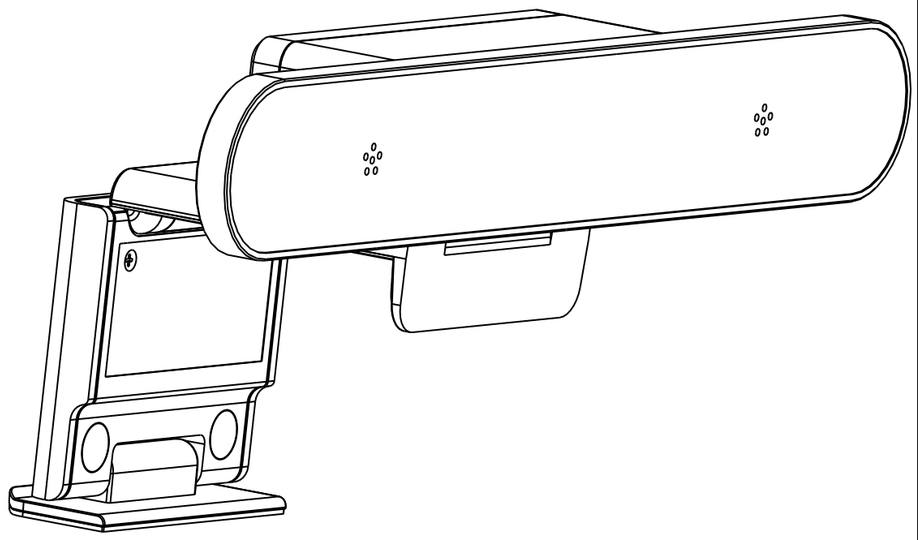

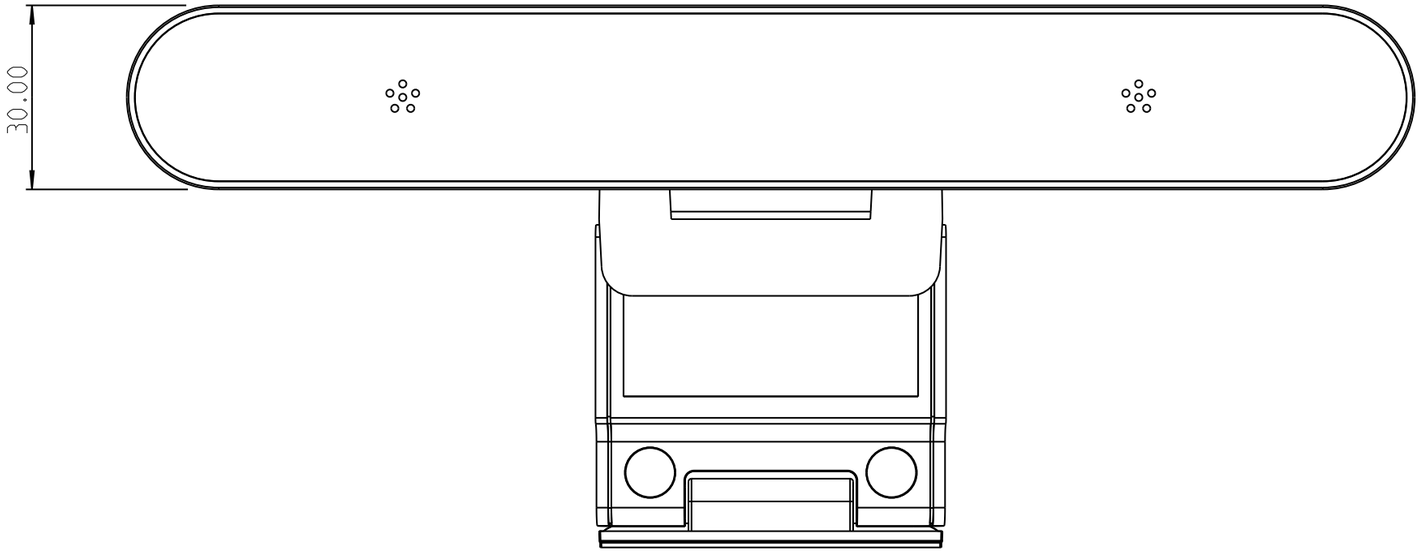
30.00

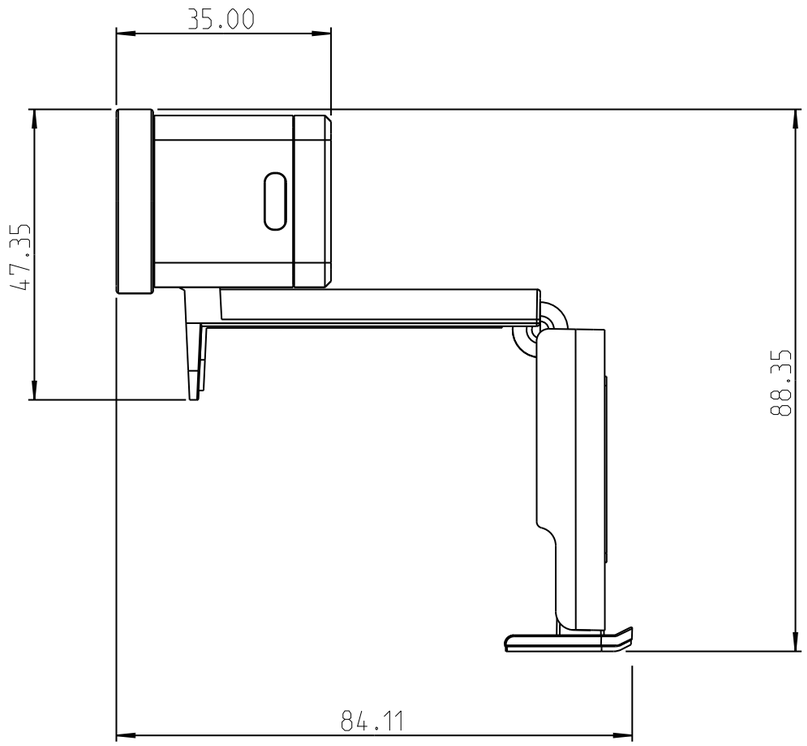
35.00
47.35
88.35
84.11